Thermal-Link (OTCO)-Organic Type

RK Series I_r: 20A

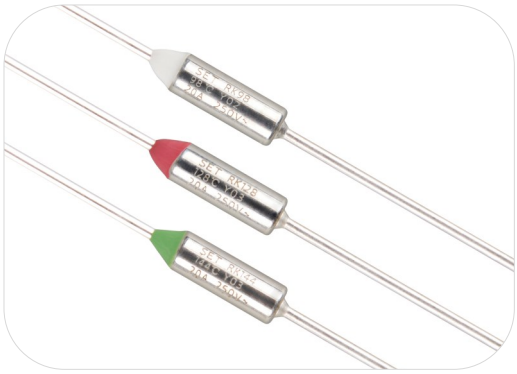

Description

Organic Thermal-Link (OTCO) is defined as a non-resettable protective device, functioning one time only. It mainly consists of metal case, spring, conductive nail, sliding contact and thermal pellet. When the Thermal-Link senses abnormal heat and temp. reaches the predetermined fusing temp., thermal pellet melts and the conductive nail separates from the isolated lead with the assistance of the trip spring, thereby the circuit is disconnected.

SETsafe | SETfuse Organic Thermal-Link (OTCO) RK series Rated Functioning Temp. from 72 ℃ to 263 ℃, Rated Current: 20 A, safety certification Includes UL, cUL, and complies with RoHS and REACH.

Features

- High Accuracy of Functioning Temp.
- Non-Resettable
- Organic Thermal Pellet
- Metal Case
- Low Resistance
- RoHS & REACH Compliant

Applications

- High Power Home Appliances
- Commercial Appliances
- Automobile Field

Customization

- Other Temp.
- The Length of Lead Wires
- Taping Packing Available
- Leads Forming Types

Structure Diagrams

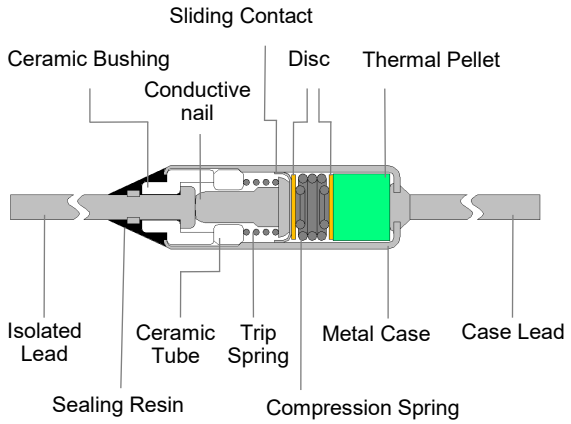

Marking

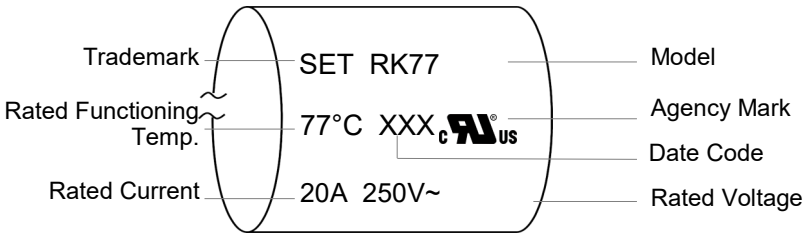

Remark: The Date Code means Year and quarter: A stands for 2000, B stands for 2001 and 01 stands for the first quarter, 02 stands for the second quarter, and so on.

Dimensions (mm)

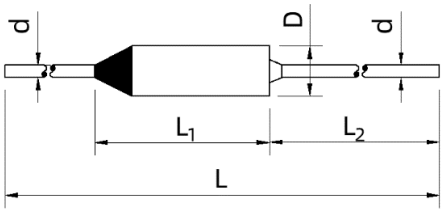

Lead Length	L	L_1	L_2	D	d
Standard	65 ± 3	(14)	35 ± 2	Φ 4 ± 0.2	Φ 1.2 ± 0.1
Long	81 ± 3	(14)	35 ± 2	Φ 4 ± 0.2	Φ 1.2 ± 0.1
Option	Customization	(14)	Customization	Φ 4 ± 0.2	Φ 1.2 ± 0.1

Specifications

Rated Functioning Temp. (T_f) °C

	Model	Fusing Temp. (°C)	T_h (°C)	T_m (°C)	I_r (A)	U_r (VAC)	UL	cUL	RoHS REACH
263	RK263	261 ± 2	220	500	20	250	○	○	RoHS● REACH *
257	RK257	254 ± 2	220	500	20	250	○	○	●
240	RK240	238 ± 2	220	500	20	250	●	●	●
229	RK229	227 ± 2	210	500	20	250	○	○	●
216	RK216	213 ± 2	203	500	20	250	●	●	●
205	RK205	203 ± 2	192	500	20	250	○	○	●
192	RK192	190 ± 2	179	500	20	250	●	●	●
184	RK184	181 ± 2	171	500	20	250	●	●	●
172	RK172	168 ± 2	159	500	20	250	○	○	●
167	RK167	164 ± 2	154	500	20	250	●	●	●
152	RK152	149 ± 2	139	500	20	250	●	●	●
144	RK144	141 ± 2	131	500	20	250	●	●	●
134	RK134	131 ± 2	121	500	20	250	●	●	●
128	RK128	124 ± 2	115	500	20	250	●	●	●
121	RK121	118 ± 2	108	500	20	250	●	●	●
117	RK117	114 ± 2	104	500	20	250	○	○	●
110	RK110	108 ± 2	97	500	20	250	○	○	●
104	RK104	102 ± 2	91	500	20	250	○	○	●
98	RK98	95 ± 2	85	500	20	250	●	●	●
94	RK94	91 ± 2	81	500	20	250	○	○	●
84	RK84	82 ± 2	71	500	20	250	○	○	●
77	RK77	74 ± 2	64	500	20	250	●	●	●
72	RK72	69 ± 2	59	500	20	250	○	○	●

Note:

1. "●"Means certificated, "○"Means non-certificated, RoHS & REACH Compliant ." * " indicates that RT263 complies with REACH Directive 1907/2006/EC, SVHC Candidate List, Batch 29, Item 235 for most of the content (please consult SET for details).
2. RK series with a T_f rating 175°C and above comply with UL conductive heat aging (CHAT) requirements.

Temp. Rise (Reference)

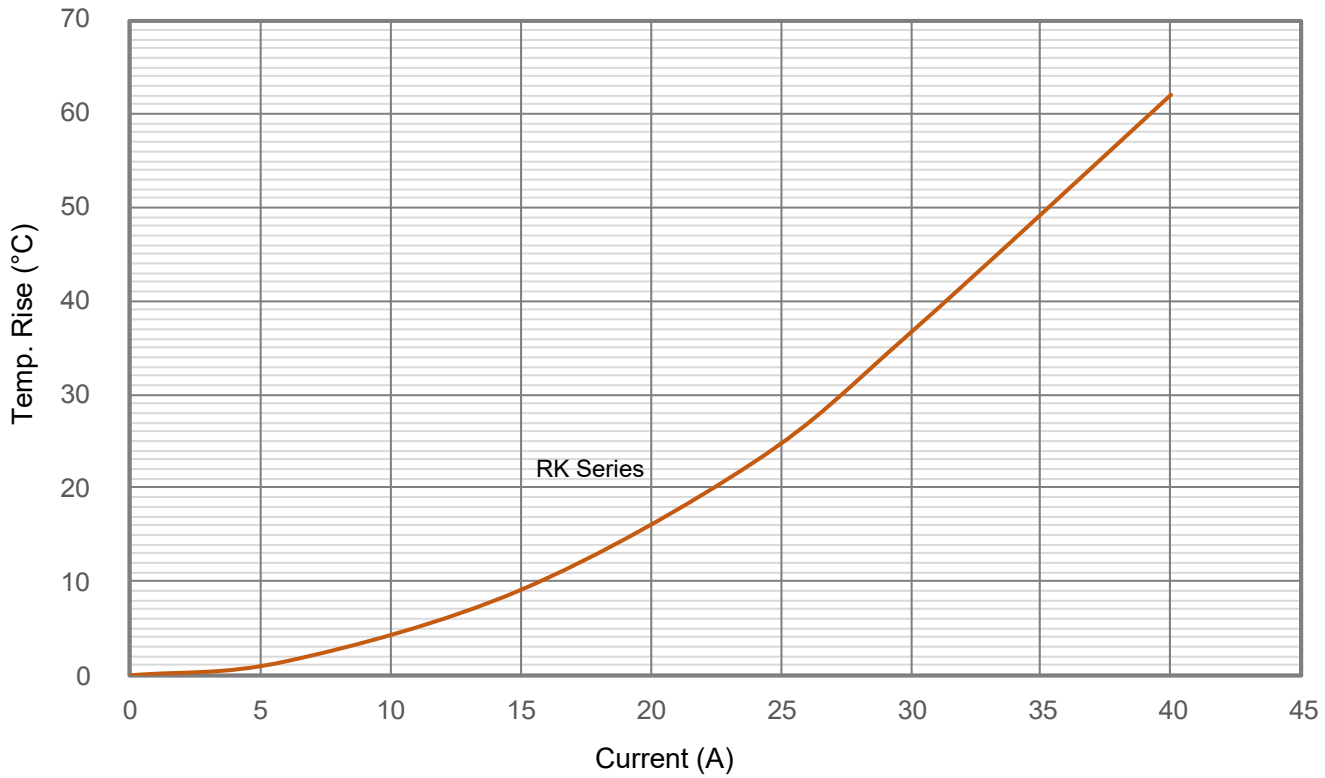

Agency Information

Agency Symbol	Standards	The File No. and certification No. obtained by SETsafe | SETfuse
	UL60691	E214712
	CAN-CSA-E60691	E214712

Packaging Information

1.Bulk

Item	PE Bag	PE Bag	Carton
Dimensions (mm)	135 x 85	220 x 190	346 x 316 x 156
Quantity (PCS)	100	1000	10000
Gross Weight (kg)			13.3 ± 10%

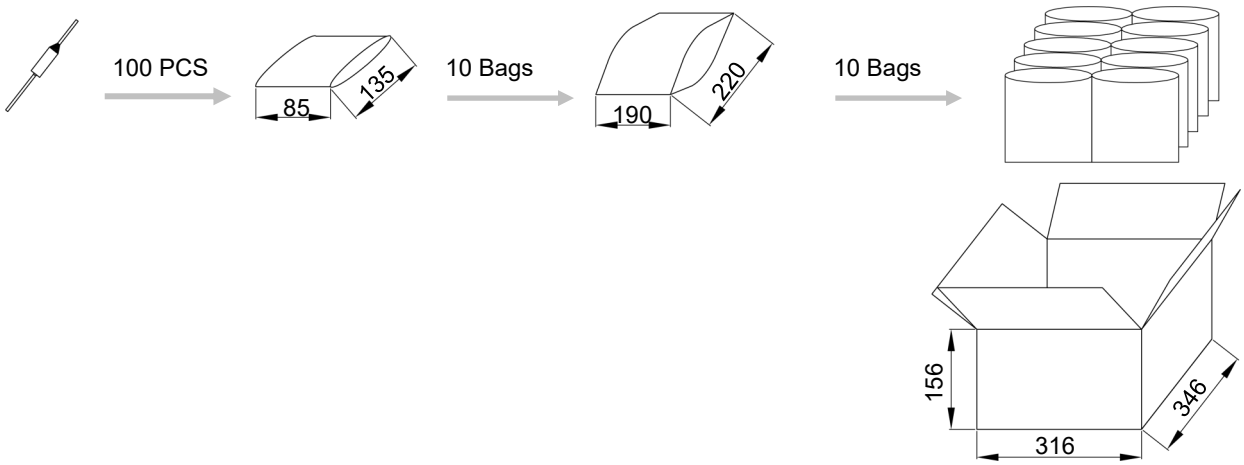

2.Taping

Item	**Scroll**	Box	Carton
Dimensions (mm)	Φ 250 x Φ 85 x 70	258 x 258 x 82	455 x 315 x 285
Quantity (PCS)	2000	2000	10000
Gross Weight (kg)			15.0 ± 10%

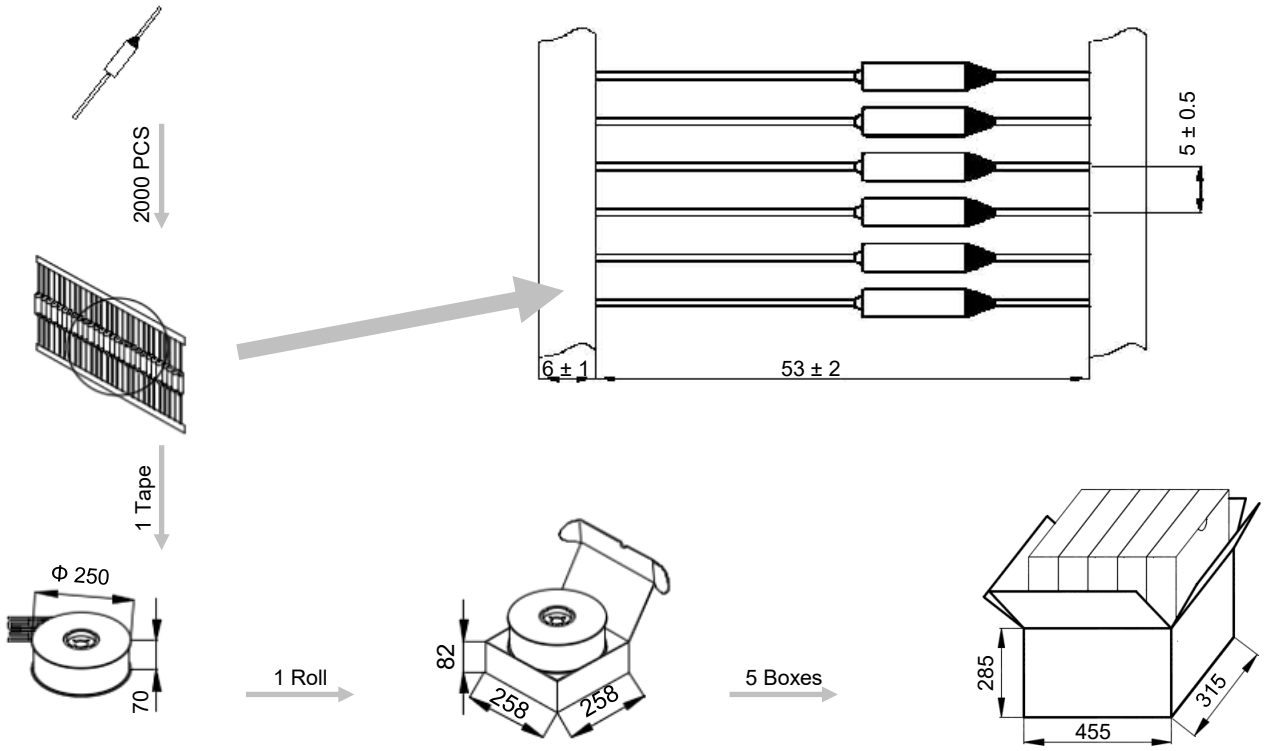

Part Numbering System

OTCO - RK 72 - L S A B - 001

Other Options

Packing

B	Bulk
T	Taping

Leads Forming

A	Straight Lead
B	Single Lead Bending
C	Leads Bending

Lead Length

S	Standard
L	Long
O	Option

Process of Mark

L	Laser

Rated Functioning Temp.

72	72 °C, See Specifications

Series

RK	Series See Specifications

Product Category

OTCO	Organic Thermal-Link

Glossary

Item	Description
TCO	**Thermal-Link** A non-resettable device incorporating a THERMAL ELEMENT which will open a circuit once only when exposed for a sufficient length of time to a temperature in excess of that for which it has been designed. — (GB 9816.1)
OTCO	**Organic Thermal-Link** Organic type Thermal-Link, organic is the THERMAL ELEMENT.
T_f	**Rated Functioning Temp.** The temperature of the Alloy Thermal-Link which causes it to change the state of conductivity with a detection current up to 10 mA as the only load. — (GB 9816.1) Tolerance: T_f °C (GB 9816.1, EN 60691, K60691). Tolerance: T_f ± 7 °C (J60691).
Fusing Temp.	**Fusing Temp.** The temperature of the Alloy Thermal-Link which causes it to change its state of conductivity is measured with silicone oil bath in which the temperature is increased at the rate of 0.5 °C to 1 °C / minute, with a detection current up to 10 mA as the only load. — (GB 9816.1)
T_h	**Holding Temp.** The Maximum temperature at which a Alloy Thermal-Link will not change its state of conductivity when conducting rated current for 168 hours. — (GB 9816.1)
T_m	**Maximum Temp. Limit** The temperature of the Alloy Thermal-Link stated by the manufacturer, up to which the mechanical and electrical properties of the Alloy Thermal-Link having changed its state of conductivity, will not be impaired for a given time. — (GB 9816.1)
I_r	**Rated Current** The current used to classify a Alloy Thermal-Link, which is the Maximum current that Alloy Thermal-Link allows to carry and is able to cut off the circuit safely. — (GB 9816.1)
U_r	**Rated Voltage** The voltage used to classify a Alloy Thermal-Link, which is the Maximum voltage that Alloy Thermal-Link allows to carry and is able to cut off the circuit safely. — (GB 9816.1)
I_n	**Nominal Discharge Current** Being able to withstand 15 peak currents of waveform 8/20 μs to test the product's durability of withstanding pulse current. — (UL 1449)
I_{max}	**Max. Discharge Current** Being able to withstand 1 peak current of waveform 8/20 μs to test max. pulse current that the product can withstand. — (UL 1449)

ATTENTION

Usage

1. Please use OTCO without exceeding the rated current and voltage.
2. Do not use the OTCO in environments out of the standard specifications, such as those containing sulfur dioxide gas, nitrogen oxide gas, ammonia gas or formic acid. It is also not suitable for using in high humidity environment or immersed in liquid.

Replace

OTCO is a non-repairable product. For safety aspect, it shall be replaced by an equivalent OTCO from the same manufacturer, and mounted in the same way.

Storage

1. OTCO must be kept in a place with no sunshine or corrosive gas, the temperature shall be within 10 °C ~ 30 °C and humidity within 30 % ~ 70 %. The validity storage period of OTCO is 12 months after purchase.
2. The case and isolated lead of OTCO are silver-plated. Therefore, to avoid vulcanization, the OTCO shall not be kept around materials such as cardboard or rubber etc. which generate sulfurous acid gas.

Lead Process

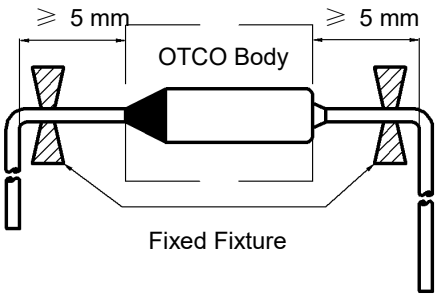

FIGURE 1

1. If lead wires has to be bent, it is important not to apply excessive pressure to the root of the lead wires. The tensile forces applied to the lead wires shall not exceed 22.7 N, and the thrust force applied to the lead wires shall not exceed 5.65 N.
2. The lead wires should be bent at a distance 5 mm or above from the body of OTCO (see Fig.1).
3. To avoid damaging the OTCO, when bending lead wires, please use pincher or similar tools to fix the OTCO.

Installation

Selection of Installation Location

1. Do not locate the OTCO in a place where severe vibration always occurs.
2. To reduce the deviations between the temperature design and the actual situation, it is recommended that the OTCO be installed in close to the thermostat or temperature sensor.

Make Sure the Temp. of Installation Location

1. The body of OTCO will generate heat as current flows through it, resulting the body temp. higher than ambient temp. The influence of temp. rise shall be considered in the design to determine the appropriate OTCO model.
2. It Considering possible temperature shock situations, it is recommended that the temperature of the body and the ambient temperature of the installation location during the operation of the temperature fuse should not exceed (Th-10)°C.
3. The end product should be tested to ensure that potential abnormal conditions do not cause ambient temp. to exceed the T_m of the OTCO.

Mounting OTCO

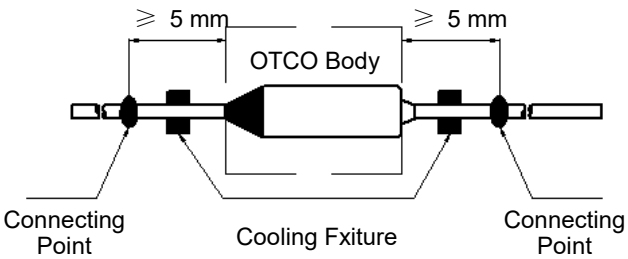

FIGURE 2

1. OTCO can be installed by soldering, welding, riveting or crimping. During and after installation, please do not pull, push or twist OTCO body or lead wires.
2. The connection point of the lead shall be no less than 5 mm away from the OTCO body (see Fig.2).
3. Try to ensure that the body of the OTCO is evenly heated. If the temp. difference is inevitable, make sure that the sealing resin side is connected close to the heat source.

Soldering

1. Soldering should be carried out according to below table. If secondary soldering is required, wait until the OTCO cools to room temp.
2. Soldering is not recommended for Thermal-Link with T_f ≤ 110°C, while non heating processes such as crimping and riveting are recommended.
3. In the process of soldering, cooling fixture should be used between soldering point and OTCO body (see Fig.2).
4. It is recommended to take X-ray after soldering, to confirm that the thermal pellet has no shrinkage after soldering.

TABLE 1: Max. Allowable Soldering Time for Different Length of Soldering Point from OTCO Body

Rated Functioning Temp. (T_f)	Length	Time	Length	Time	Length	Time	Max. Soldering Temp.
(°C)	(mm)	(s)	(mm)	(s)	(mm)	(s)	(°C)
≤ 110	5	N / A	15	N / A	25	N / A	400
111 ~ 150	5	N / A	15	1	25	2	
151 ~ 190	5	1	15	2	25	3	
≥ 191	5	1	15	3	25	5	

Welding

1. Avoid welding current flowing into the inside of the OTCO. The welding current will cause the internal parts to be welded together, resulting in the failure function of OTCO.
2. During the welding process, the lead wires of the OTCO must be supported to avoid the damage of the OTCO.
3. In the process of welding, cooling fixture should be used between welding point and OTCO body (See Fig.2).
4. It is recommended to take X-ray after welding, to confirm that the thermal pellet has no shrinkage after welding.

Riveting or Crimping

1. Select materials with low resistance (such as copper) for riveting and crimping.
2. Contact resistance shall be as small as possible. Large contact resistance will cause high temp. to make OTCO open in advance.
3. It is better to crimp OTCO leads to stranded lead wires rather than solid wires as the stranded wire may be crimped tighter and maintain better electrical contact during temp. cycling.
4. During the riveting and crimping process, ensure that the lead wires shall not be reversed, sealing resin shall not be destroyed.
5. When the working temp. exceeds 150°C, soldering reinforcement is recommended after riveting and crimping.

The isolated lead is forbidden to contact OTCO body directly to avoid short circuit (See Fig.3).

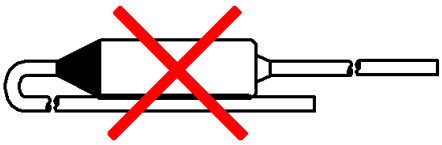

FIGURE 3

Thermal-Link (OTCO)-Organic Type Features & Model List Overview

Rated Functioning Temp. T_f(°C)	RS	RB	RT	RK	RU	RP
263	RS263	RB263	RT263	RK263	RU263	RP263
257	RS257	RB257	RT257	RK257	RU257	RP257
240	RS240	RB240	RT240	RK240	RU240	RP240
229	RS229	RB229	RT229	RK229	RU229	RP229
216	RS216	RB216	RT216	RK216	RU216	RP216
205	RS205	RB205	RT205	RK205	RU205	RP205
192	RS192	RB192	RT192	RK192	RU192	RP192
184	RS184	RB184	RT184	RK184	RU184	RP184
172	RS172	RB172	RT172	RK172	RU172	RP172
167	RS167	RB167	RT167	RK167	RU167	RP167
152	RS152	RB152	RT152	RK152	RU152	RP152
144	RS144	RB144	RT144	RK144	RU144	RP144
134	RS134	RB134	RT134	RK134	RU134	RP134
128	RS128	RB128	RT128	RK128	RU128	RP128
121	RS121	RB121	RT121	RK121	RU121	RP121
117	RS117	RB117	RT117	RK117	RU117	RP117
110	RS110	RB110	RT110	RK110	RU110	RP110
104	RS104	RB104	RT104	RK104	RU104	RP104
99	RS99	RB99	RT99	○	○	○
98	○	○	○	RK98	RU98	RP98
94	RS94	RB94	RT94	RK94	RU94	RP94
84	RS84	RB84	RT84	RK84	RU84	RP84
77	RS77	RB77	RT77	RK77	RU77	RP77
72	RS72	RB72	RT72	RK72	RU72	RP72
I_r (A) Rated Current	10		15 / 16	20	25	30
U_r (VAC) Rated Voltage	250		125 / 250	250		
Product Structure